CAD GENERATED DRAWING - NO PENCIL CHANGES ALLOWED

PART No.	BODY	BODY STYLE	FUSE PROVIDED	FUSE RATING	REMARKS
0FHA0001Z	0FHA0001Z	1	NONE	-----	NOTE 1
0FHA0002Z	0FHA0002Z	2	NONE	-----	NOTE 2
0FHA0003Z	0FHA0001Z	1	0257003.P	3 AMP	NOTE 1
0FHA0004Z	0FHA0001Z	1	0257004.P	4 AMP	NOTE 1
0FHA0005Z	0FHA0001Z	1	0257005.P	5 AMP	NOTE 1
0FHA0075Z	0FHA0001Z	1	025707.5P	7.5 AMP	NOTE 1
0FHA0010Z	0FHA0001Z	1	0257010.P	10 AMP	NOTE 1
0FHA0015Z	0FHA0001Z	1	0257015.P	15 AMP	NOTE 1
0FHA0020Z	0FHA0001Z	1	0257020.P	20 AMP	NOTE 1
0FHA0025Z	0FHA0002Z	2	0257025.P	25 AMP	NOTE 2
0FHA0030Z	0FHA0002Z	2	0257030.P	30 AMP	NOTE 2

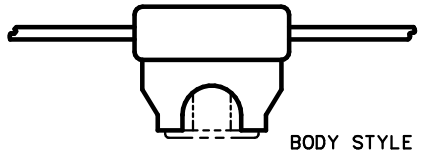

BODY STYLE #2

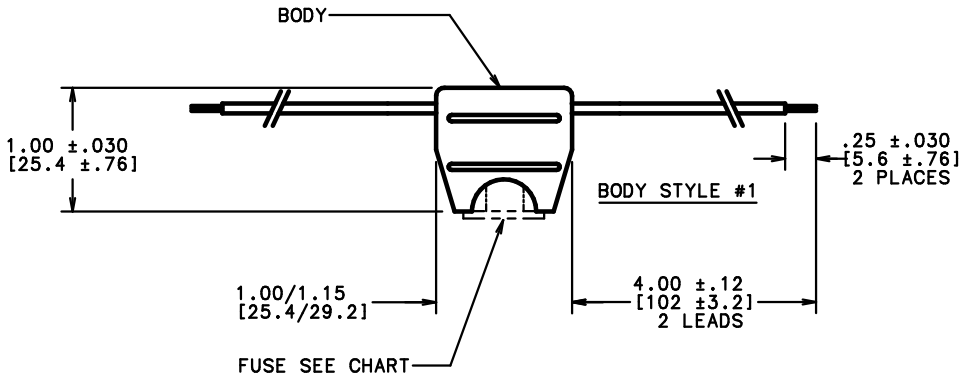

NOTES:
1. FOR 0FHA0001Z:
   A) MAX. RATING: 20 AMPS, 32 VOLTS AT A MAX. OPERATING TEMPPERATURE OF 180° F (82° C).
   B) BODY MATERIAL: HIGH TEMPERATURE P.V.C., BLACK.
   C) BLACK WIRE LEADS, #16 GAUGE, COPPER STRANDED (19 STRAND/29 GAUGE) PVC INSULATION. 0.016" THICK [0.406mm] AUTOMOTIVE LOW TENSION TYPE GPT/TW PER S.A.E. STRANDED J1128.

2. FOR 0FHA0002Z:
   A) MAX. RATING: 30 AMPS, 32 VOLTS AT A MAX. OPERATING TEMPPERATURE OF 180° F (82° C).
   B) BODY MATERIAL: HIGH TEMPERATURE POLYURETHANE, BLACK.
   C) ORANGE WIRE LEADS, #12 GAUGE, NOM. O.D. 0.136"[3.5mm], COPPER STRANDED (19 STRAND/25 GAUGE) PVC INSULATION. 0.026" THICK [0.660mm], RATED 300V, TEMP. RANGE: -10°C TO +80°C.

GENERAL NOTES:
1. WIRE LEADES ARE MOLDED INTO FUSEHOLDER BODY.
2. DIMENSIONS IN INCHES, [mm].

UNLESS OTHERWISE SPECIFIED, DIMENSIONS DO NOT INCLUDE PLATING.
DENOTES CRITICAL CHARACTERISTICS.
DENOTES CPK DIMENSIONS,-MINIMUM CPK VALUE
DENOTES A CHARACTERISTIC THAT PROVIDES AN INDICATION OF PROCESS PERFORMANCE. PROCEDURE FOR MEASUREMENT AND TRACKING TO BE DEFINED IN LITTELFUSE INSPECTION INSTRUCTIONS.
DENOTES CP DIMENSIONS,-MINIMUM CP VALUE TO BE WITHIN THE DIMENSIONAL LIMITATIONS SHOWN ON DRAWING AND INITIALLY LOCATED TO AIM FOR MAXIMUM TOOL LIFE.

UNCONTROLLED DOCUMENT

NO	COMPONENT NO	DESCRIPTION	QTY/M	U/M

BILL OF MATERIAL

MATL SPEC	FINISH

COPIES TO			
1	9	18	
2	10	19	
3	12	20	
4	13	21	
5	14	23	
6	15	33	
7	16	43	
8	17	53	

DRW	JMB	DATE	2/10/99
CHK		DATE	
APPD		DATE	
		RAW STK WT	LBS/M

SCALE 1=1
SUPER DRW

TOLERANCE UNLESS OTHERWISE SPECIFIED
TWO PLACE DEC ±.01 FRACTION ±
THREE PLACE DEC ±.005 ANGULAR ±1°

TITLE AUTOFUSE HOLDER, INLINE (FUSE OPTIONAL)

Littelfuse DES PLAINES, ILLINOIS 60016

REVISION E

DWG. NO. SERIES OUTLINE
OFHA0000Z

LTR	REVISION	CHK	APD
E	39728C- REVISED & REDRAWN ON NEW FORMAT 2/26/99 JMB		