PART NUMBER	"A"	"B"	"C"	"D"	LEAD "A" COLOR	LEAD "B" COLOR
OFHM0001ZXJ	94±5 [3.70±0.2]	94±5 [3.70±0.2]	13±2 [.51±0.08]	13±2 [.51±0.08]	BLACK	BLACK
OFHM0001ZXJ-RW	94±5 [3.70±0.2]	94±5 [3.70±0.2]	13±2 [.51±0.08]	13±2 [.51±0.08]	RED	RED
OFHM0001ZXJA	95±5 [3.74±0.2]	3850±30 [151.57±1.2]	NO END STRIP	NO END STRIP	RED	RED
OFHM0001ZXJB	460±5 [18.11±0.2]	120±5 [4.72±0.2]	13±2 [.51±0.08]	13±2 [.51±0.08]	BLACK	BLACK

LTR	DATE	REVISION	CHK	APD
A	03/29/07	63207 - RELEASE BRK		
B	06/06/07	85498D - CHG TOL FROM ±1 TO ±1.5, CHG NOTE 6 BRK		
C	07/24/07	85549D- CHG TO CHARTED DRAWING, HOUSING HEIGHT TO 18.0 AND STRIP TOLERANCE TO ±2, BRK		
D	08/04/09	000738ER-ADDED OFHM0001ZXJ-RW CHG. BLACK WIRE TO "SEE CHART" IN NOTE 3 GMB		
E	08/09/12	505766ECA-ADDED DIMENSION 7.5 ±0.25 FYUE		
F	01/14/14	509993ERA-RELEASE OFHM0001ZXJB FYUE		
G	04/30/15	511837ECA-REMOVE MODEL NAME OF HOLDER MATERIAL FYUE		

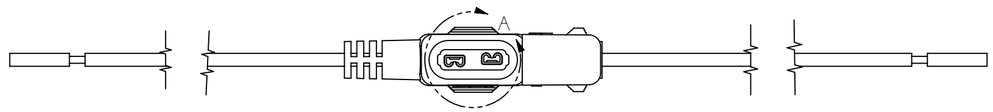

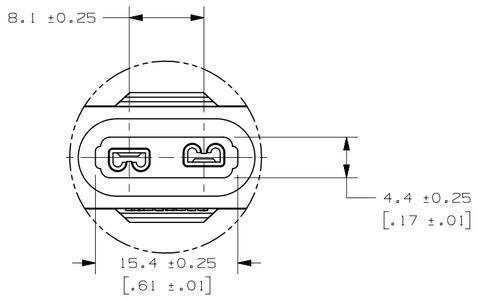

DETAIL A
SCALE 2:1

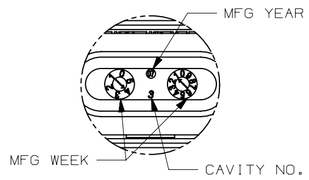

DETAIL B
SCALE 2:1

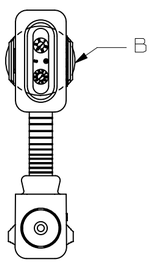

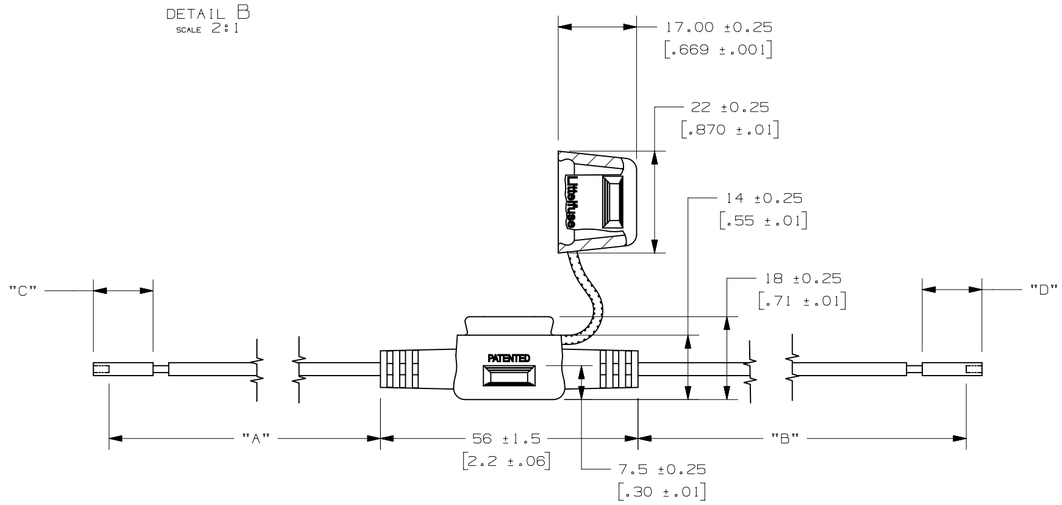

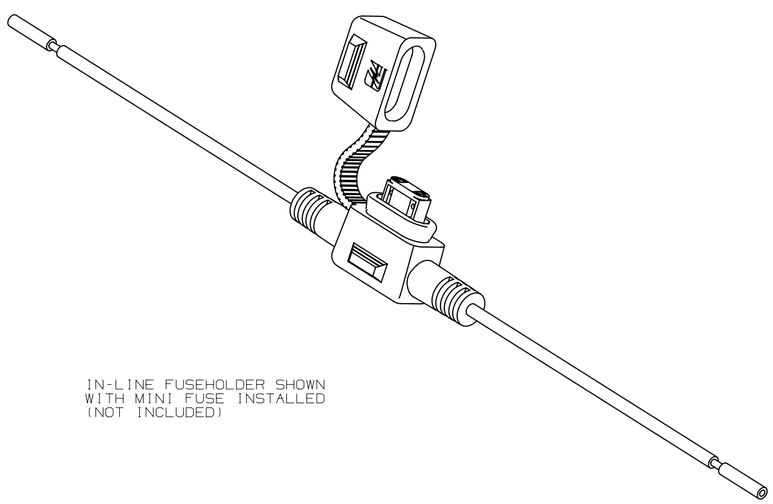

IN-LINE FUSEHOLDER SHOWN
WITH MINI FUSE INSTALLED
(NOT INCLUDED)

NOTES:
1. HOLDER MATERIAL: BLACK TPV
2. CONTACTS: COPPER ALLOY: TIN-PLATED
3. WIRE: SEE CHART, 14 AWG STRANDED COPPER, 125°C RATED, GXL WIRE
4. CRIMP: MUST MEET SAE/USCAR 21 STANDARD
5. RATING: MAX. 20A, 32Vdc
6. FUSEHOLDERS SHOULD NOT BE PLACED UNDER TENSION IN FINAL APPLICATION
7. MAX TEMPERATURE 125°C

METRIC

UNLESS OTHERWISE SPECIFIED, DIMENSIONS ARE IN MILLIMETERS.
DIMENSIONS IN BRACKETS [ ] ARE INCHES

UNLESS OTHERWISE SPECIFIED, DIMENSIONS DO NOT INCLUDE PLATING.

◎	DENOTES CRITICAL CHARACTERISTICS.
CPK	DENOTES CPK DIMENSIONS, -MINIMUM CPK VALUE
ST	DENOTES A CHARACTERISTIC THAT PROVIDES AN INDICATION OF PROCESS PERFORMANCE. PROCEDURE FOR MEASUREMENT AND TRACKING TO BE DEFINED IN LITTELFUSE INSPECTION INSTRUCTIONS
CP	DENOTES CP DIMENSIONS, -MINIMUM CP VALUE MUST BE WITHIN THE DIMENSIONAL LIMITATIONS SHOWN ON DRAWING AND INITIALLY LOCATED TO ALLOW FOR MAXIMUM TOOL LIFE

COPIES TO					
1	9	18	MATL SPEC	SEE NOTES	
2	10	19			
3	12	20	FINISH	SEE NOTES	
4	13	21	DRW BRK	DATE 03/29/07	SCALE 1:1
5	14	23			
6	15	33	CHK	DATE	SUPER DR
7	16	43			
8	17	53	APPD	DATE	FINSH GOOD WT GRAMS/PIECE

TOLERANCE UNLESS OTHERWISE SPECIFIED
ONE PLACE DEC +/-.3
TWO PLACE DEC +/-.15
THREE PLACE DEC +/-.100
ANGULAR +/-1°

3RD ANGLE PROJECTION

TITLE MINI IN-LINE FUSEHOLDER

Littelfuse®
DES PLAINES, ILLINOIS 60016

REVISION	DRWG. NO.	OUTLINE
G	OFHM0001ZXJ	

CAD GENERATED DRAWING – NO PENCIL CHANGES ALLOWED