PART NUMBER	"A"	"B"	"C"	"D"	LEAD "A" COLOR	LEAD "B" COLOR	WITH COVER
OFHM0002ZXJ	94±5 [3.70±.2]	94±5 [3.70±.2]	13±2 [.51±.08]	13±2 [.51±.08]	ORANGE	ORANGE	YES
OFHM0002ZXJA	93.5±3 [3.681±.12]	93.5±3 [3.681±.12]	12±2 [.472±.08]	6±2 [.236±.08]	RED	ORANGE	YES
OFHM0002ZXJB	167±3 [6.575±.12]	167±3 [6.575±.12]	8±2 [.315±.08]	17±2 [.67±.08]	ORANGE	RED	YES
OFHM0002ZXJC	467±6.4 [18.386±.25]	127±3 [5.0±.12]	5.5±2 [.22±.08]	15.88±2 [.625±.08]	ORANGE	RED	YES
OFHM0002ZXJD	183.8±5 [7.236±.20]	183.8±5 [7.236±.20]	14.2±2 [.56±.08]	14.2±2 [.56±.08]	ORANGE	ORANGE	YES
OFHM0002ZXJE	203.14±5 [7.998±.20]	203.14±5 [7.998±.20]	N/A	N/A	ORANGE	ORANGE	NO
OFHM0002ZXJF	60±5 [2.362±.20]	60±5 [2.362±.20]	10±2 [.394±.08]	10±2 [.394±.08]	ORANGE	ORANGE	YES
OFHM0002ZXJG	110±5 [4.331±.20]	195±5 [7.677±.20]	10±2 [.394±.08]	17±2 [.669±.08]	ORANGE	RED	YES
OFHM0002ZXJH	82.5±5 [3.25±.20]	82.5±5 [3.25±.20]	6.35±2 [.25±.08]	6.35±2 [.25±.08]	GRAY	GRAY	YES
OFHM0002ZXJK	114.3±5 [4.5±.20]	114.3±5 [4.5±.20]	6.35±2 [.25±.08]	6.35±2 [.25±.08]	GRAY	GRAY	YES
OFHM0002ZXJL	93.5±3 [3.681±.12]	93.5±3 [3.681±.12]	12.2±2 [.48±.08]	12.2±2 [.48±.08]	RED	ORANGE	YES
OFHM0002ZXJM	94±5 [3.70±.2]	94±5 [3.70±.2]	10±2 [.394±.08]	6±2 [.236±.08]	ORANGE	ORANGE	YES
OFHM0002ZXJN	94±5 [3.70±.2]	94±5 [3.70±.2]	N/A	N/A	ORANGE	ORANGE	YES
OFHM0002ZXJP	94±5 [3.70±.2]	94±5 [3.70±.2]	6.30±2 [.25±.08]	6.30±2 [.25±.08]	ORANGE	ORANGE	YES
OFHM0002ZXJR	190.5±5 [7.50±.2]	60±5 [2.36±.2]	8±2 [.32±.08]	N/A	ORANGE	ORANGE	YES

LTR	DATE	REVISION	CHK	APD
A	03/29/07	63207 - RELEASE BRK		
B	06/06/07	85498D - CHG TOL FROM ±1 TO ±1.5, CHG NOTE 6 BRK		
C	07/24/07	85549D- CHG TO CHARTED DRAWING, HOUSING HEIGHT TO 18.0 AND STRIP TOLERANCE TO ±2. BRK		
D	08/15/07	000138ER - ADD OFHM0002ZXJA, OFHM0002ZXJB, AND OFHM0002ZXJC. BRK		
E	11/02/07	000283EC-CHG. STRIP TOL FOR ZXJA-ZXJC, CHG DIM "B" FOR ZXJC TO 127mm GMB		
F	09/19/08	000498ER-RELEASE OFHM0002ZXJD AND OFHM0002ZXJE GMB		
G	12/22/08	000562ER-RELEASE OFHM0002ZXJF GMB		
H	03/10/09	000608ER-RELEASE OFHM0002ZXJG GMB		
J	03/25/09	001066EC-CHG STRIP LENGTH FROM 6 TO 10 (DIM C & D) GMB		
K	06/04/09	001132EC-ON OFHM0002ZXJG AND OFHM0002ZXJG-F10, CHG. 105±5 TO 110±5, 225&±5 TO 195±5, AND 8±2 TO 10±2 GMB		
L	01/08/10	5A69-ADDED VIEW WITHOUT COVER ADDED COLUMN "WITH COVER" GMB		
M	05/26/11	502465ERA-RELEASE OFHM0002ZXJH RLDJ		
N	09/16/11	503221ERA - RELEASE OFHM0002ZXJK RLDJ		
P	06/21/12	505292ERA - RELEASED OFHM0002ZXJL FYUE		
R	03/02/15	511596ERA-RELEASED OFHM0002ZXJM FYUE		
S	04/30/15	511837ECA-REMOVE MODEL NAME OF HOLDER MATERIAL FYUE		
T	07/Sep/15	514860GCA-RELEASED OFHM0002ZXJN FYUE		
U	15/Oct/15	515041GCA-RELEASED OFHM0002ZXJP FYUE		
V	18/Oct/18	520282GCC-RELEASED OFHM0002ZXJR FYUE		

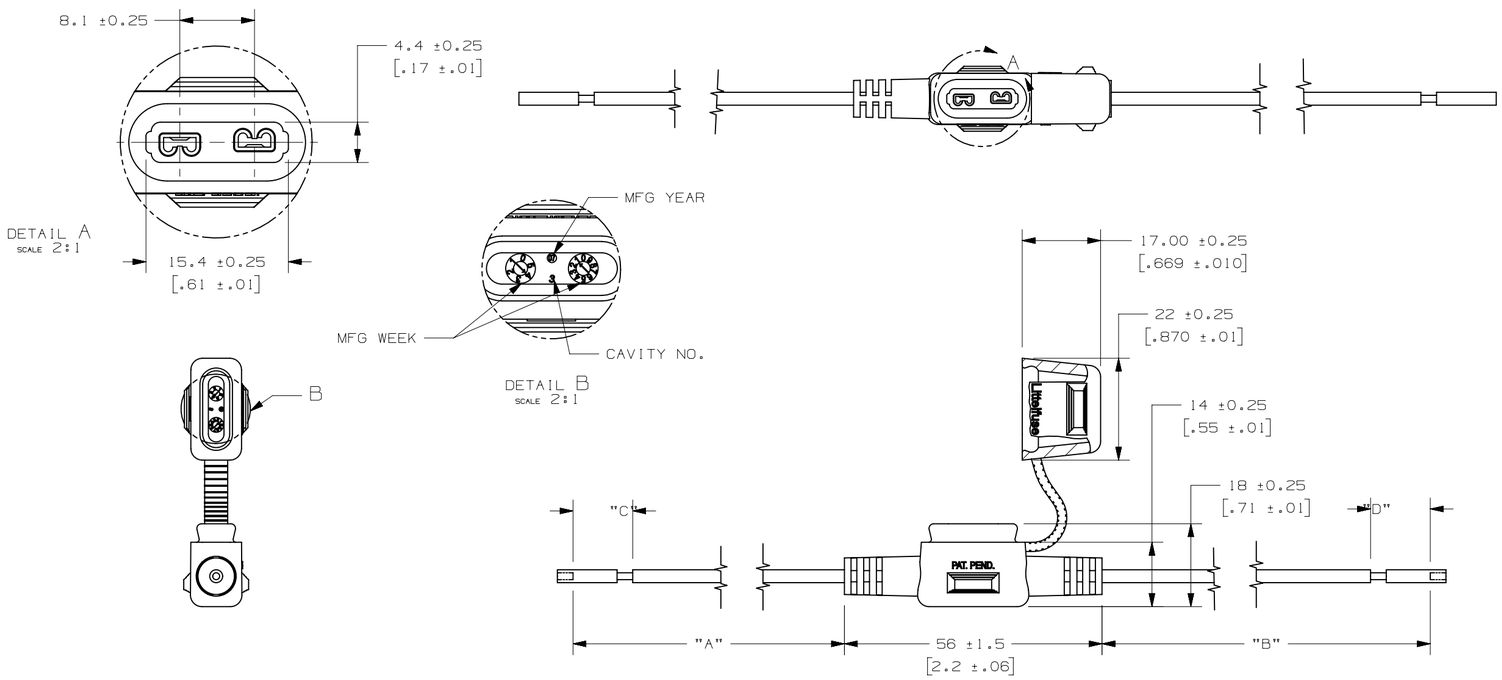

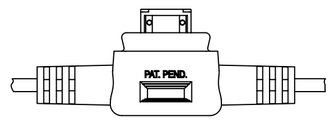

SEE CHART FOR PARTS PROVIDED WITHOUT COVER

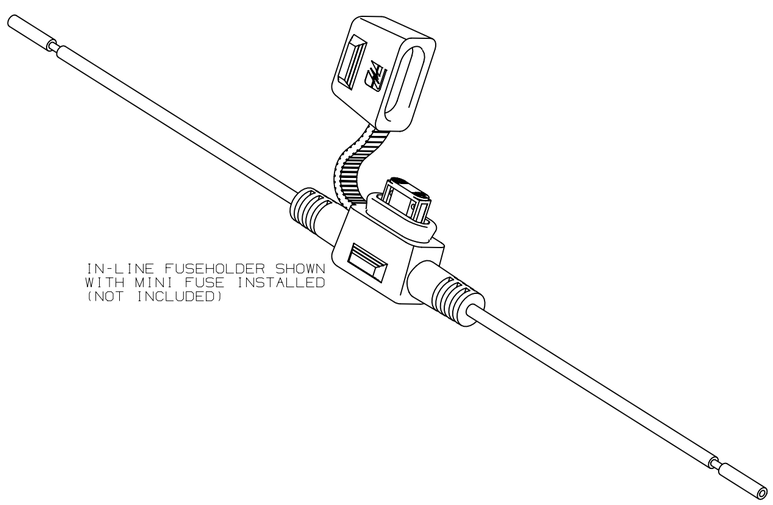

IN-LINE FUSEHOLDER SHOWN WITH MINI FUSE INSTALLED (NOT INCLUDED)

NOTES:
1. HOLDER MATERIAL: BLACK TPV, UL 94V-0
2. CONTACTS: COPPER ALLOY: TIN-PLATED
3. WIRE: 12 AWG STRANDED COPPER, 125°C RATED, GXL WIRE
4. CRIMP: MUST MEET SAE/USCAR 21 STANDARD
5. RATING: MAX. 30A, 32Vdc
6. FUSEHOLDERS SHOULD NOT BE PLACED UNDER TENSION IN FINAL APPLICATION
7. MAX TEMPERATURE 125°C

METRIC

UNLESS OTHERWISE SPECIFIED, DIMENSIONS ARE IN MILLIMETERS. DIMENSIONS IN BRACKETS [ ] ARE INCHES

UNLESS OTHERWISE SPECIFIED, DIMENSIONS DO NOT INCLUDE PLATING.

◎	DENOTES CRITICAL CHARACTERISTICS.
CPK	DENOTES CPK DIMENSIONS, -MINIMUM CPK VALUE
⟨ST⟩	DENOTES A CHARACTERISTIC THAT PROVIDES AN INDICATION OF PROCESS PERFORMANCE. PROCEDURE FOR MEASUREMENT AND TRACKING TO BE DEFINED IN LITTELFUSE INSPECTION INSTRUCTIONS
CP	DENOTES CP DIMENSIONS, -MINIMUM CP VALUE MUST BE WITHIN THE DIMENSIONAL LIMITATIONS SHOWN ON DRAWING AND INITIALLY LOCATED TO ALLOW FOR MAXIMUM TOOL LIFE

COPIES TO: 1 9 18 / 2 10 19 / 3 12 20 / 4 13 21 / 5 14 23 / 6 15 33 / 7 16 43 / 8 17 53

MATL SPEC: SEE NOTES		
FINISH: SEE NOTES		
DRW: BRK	DATE: 03/29/07	SCALE: 1:1
CHK	DATE	SUPER DR
APPD	DATE	FINSH GOOD WT GRAMS/PIECE

TOLERANCE UNLESS OTHERWISE SPECIFIED
ONE PLACE DEC +/-.3 — THREE PLACE DEC +/-.100
TWO PLACE DEC +/-.15 — ANGULAR +/-1°

3RD ANGLE PROJECTION

TITLE: MINI IN-LINE FUSEHOLDER

Littelfuse® DES PLAINES, ILLINOIS 60016

REVISION: V — DRWG. NO. OL-OFHM0002ZXJ — OUTLINE

CAD GENERATED DRAWING – NO PENCIL CHANGES ALLOWED