THIS DRAWING AND THE INFORMATION CONTAINED WITHIN IT ARE CONFIDENTIAL AND MAY NOT BE COPIED OR DISCLOSED WITHOUT THE WRITTEN PERMISSION OF LITTELFUSE.

REVISIONS				
ZONE	REV.	DESCRIPTION	DATE	APPROVED
	A	V. HERNANDEZ - RELEASED PER PCO: 500000301344	7/31/2025	C. MONTIEL

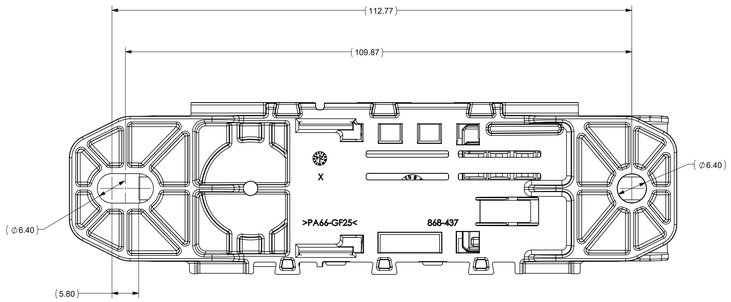

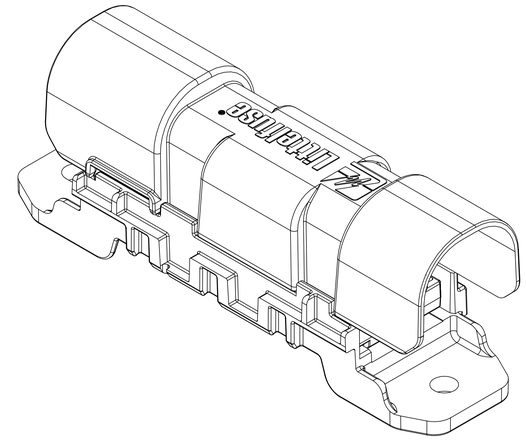

FHBD56A
M6 ASSY (56 MM PITCH)

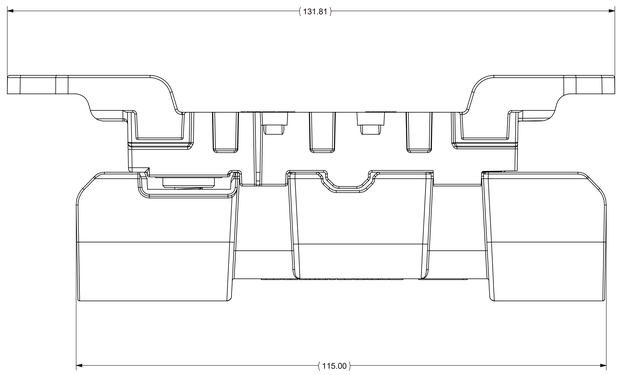

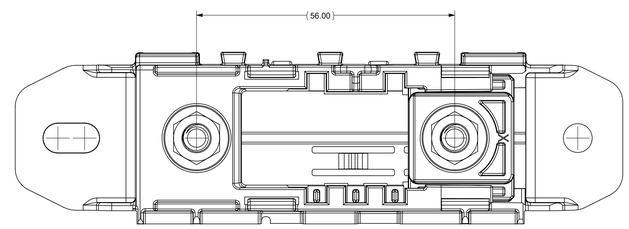

FHBD56A
M6 ASSY (56 MM PITCH)
(COVER NOT SHOWN IN THIS VIEW)

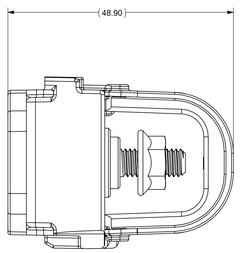

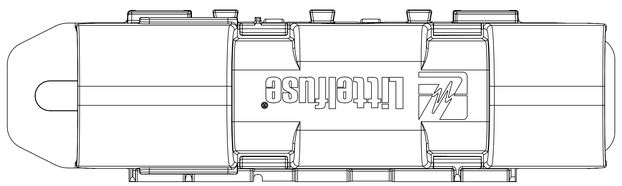

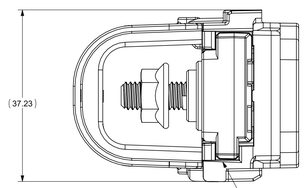

M6 VERSION
POKA-YOKE TAB

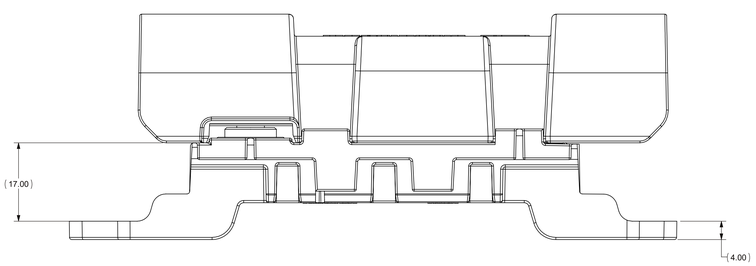

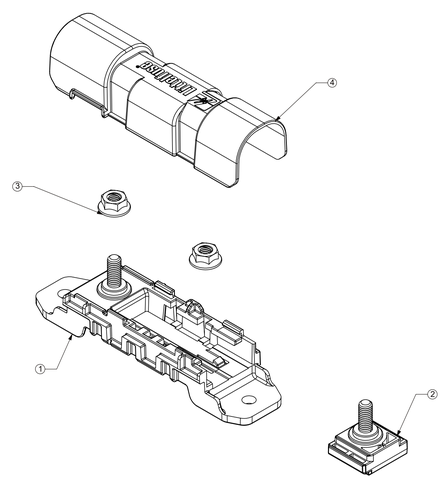

SCALE 1 : 1

NOTES:
1. MATERIALS:
   FH BASE, MOVABLE TAB & COVER: POLYAMIDE.
   NUTS: STAINLESS STEEL.
   INSERT MOLDED STUDS: STEEL ZINC PLATED.

2. MOUTING STUDS TORQUE:
   M6: (USING M6 BOLTS & WASHERS) 10 ± 1 N-M.

3. INPUT/OUTPUT STUD TORQUE:
   M6: 11 ± 1 N-M

4. FOR ARRAYED OPTION, USE BUSBAR OPTION (SOLD SEPARATELY):

   BUSBAR 2-HOLES: 882-954-2
   BUSBAR 3-HOLES: 882-954-3
   BUSBAR 4-HOLES: 882-954-4
   BUSBAR 5 HOLES: 882-954-5

ITEM NO.	PART NUMBER	DESCRIPTION	QTY.
1	-	BASE FUSE HOLDER M6	1
2	-	MOVABLE TAB M6	1
3	903-196	M6 SS SERRATED FLANGE NUT	2
4	-	MEGA/MIDI HOLDER COVER	1

LIMIT DIMENSIONS OF PLASTIC MOLDED PARTS FOR NOMINAL SIZE RANGES PER ISO IN LITTELFUSE CVP-NPD20-0002. DIMENSIONS mm

1 to 3	>3 to 6	>6 to 10	>10 to 18	>18 to 30	>30 to 50	>50 to 80	>80 to 120	>120 to 180	>180 to 250	>250 to 315	>315 to 400	ANGLE
±0.08	±0.11	±0.14	±0.17	±0.20	±0.23	±0.36	±0.56	±0.58	±0.65	±0.70	±0.78	NONE

SURFACE PROFILE DIMENSIONS OF PLASTIC MOLDED PARTS FOR NOMINAL SIZE RANGES PER ISO IN LITTELFUSE CVP-NPD20-0002. DIMENSIONS MM

0.50	0.50	0.50	0.50	0.50	0.50	0.50	0.50	1.0	2.0	4.0	4.0	

DIMENSIONS AND TOLERANCES ARE DEFINED ACCORDING TO ASME/ASME Y14.5-1994.

DIMENSIONS WITH SHOWN IN MILLIMETERS. DIMENSIONS AND TOLERANCES ARE

●	FTI FUNCTION CRITICAL CHARACTERISTICS
<S>	SAFETY COMPLIANCE CRITICAL CHARACTERISTICS SYMBOL
CPK	DENOTES CPK DIMENSIONS MINIMUM CPK VALUE
ST	DENOTES A CHARACTERISTIC THAT PROVIDES AN INDICATION OF PROCESS PERFORMANCE PROCEDURE FOR MEASUREMENTAND TRACKINGTO BE DEFINED IN LITTELFUSE INSPECTION INSTRUCTIONS
CP	DENOTES CP DIMENSIONS. -MINIMUM CP VALUE MUST BE WITHIN THE DIMENSIONAL LIMITATIONS SHOWN ON DRAWING AND INITIALLY LOCATED TO ALLOW FOR MAXIMUM TOOL LIFE

	NAME	DATE
DRAWN	V. HERNANDEZ	7/24/2025
CHECKED	R. MORALES	7/24/2025

Littelfuse
Expertise Applied | Answers Delivered

TITLE: UNSEALED FH M6 ASSY 56 MM PITCH

FORM NO. CVP-FRM-0002 REV A

THIRD ANGLE PROJECTION

SIZE: E | DWG. NO.: OUTLINE | OL-FHBD56A | REV: A

DO NOT SCALE DRAWING | SCALE 2:1 | SHEET 1 OF 1