THIS DRAWING AND THE INFORMATION CONTAINED WITHIN IT ARE CONFIDENTIAL AND MAY NOT BE COPIED OR DISCLOSED WITHOUT THE WRITTEN PERMISSION OF LITTELFUSE.

REVISIONS				
ZONE	REV.	DESCRIPTION	DATE	APPROVED
	A	GCF526311 - NEW RELEASE	4/18/2023	DCHENG
	B	FLANGE NUT PN WAS 980003760	8/3/2023	

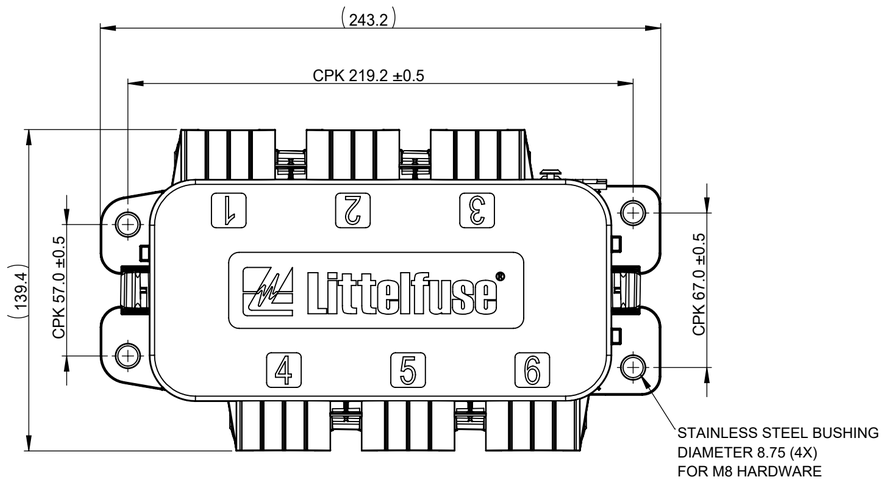

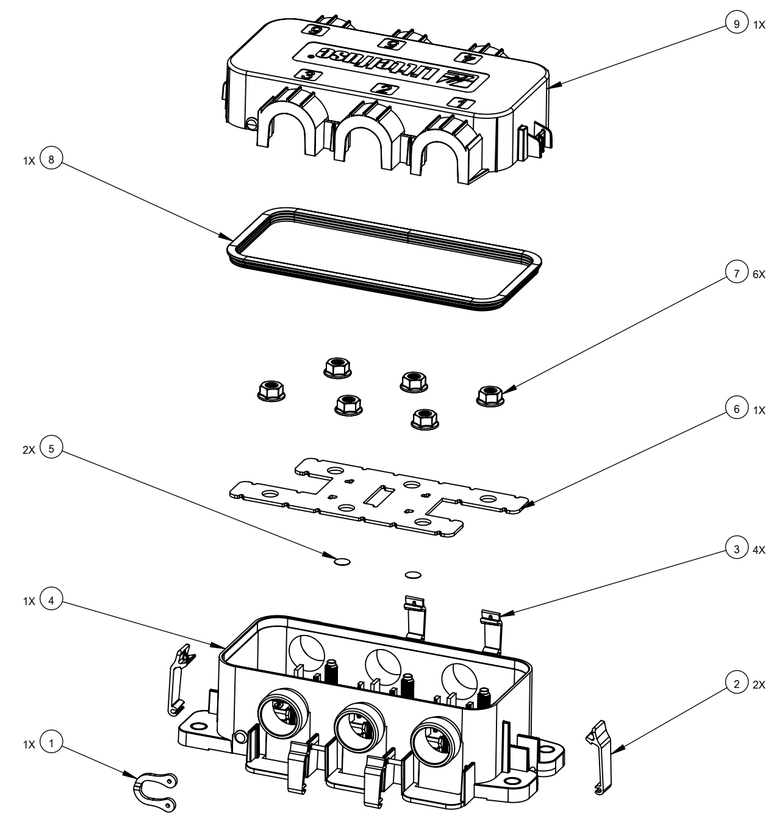

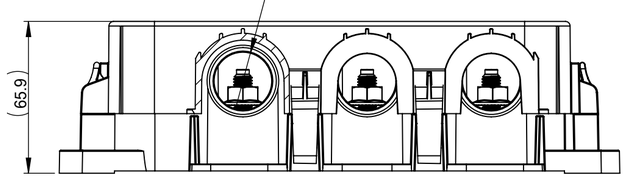

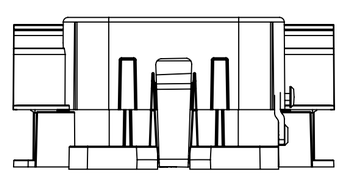

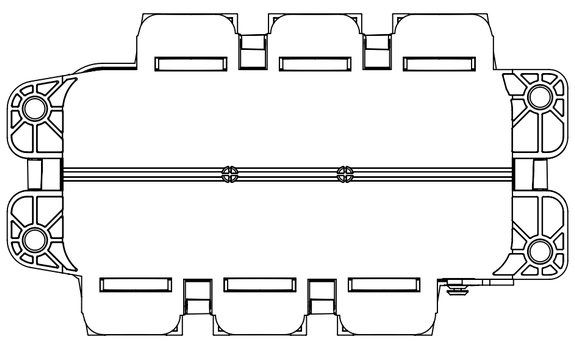

NOTES:
1. MATERIALS:
   HOUSING/COVER: BLACK MAPEX A0520FN
   BUS BAR: C11000 Sn PLATED
   BLIND CAP: BLACK SILICON RUBBER
   COVER SEAL: GREEN SILICON RUBBER
   STUD: STEEL Zn/Fe PLATED
   LATCH: YELLOW POM
2. FUSES ASSEMBLY TORQUE:
   M8 MOUNTING TORQUE: 14±2 Nm
3. ALL FUSES MUST NOT EXCEED 70% OF RATED CURRENT
4. MAX. MAIN INPUT: 400A PERMANENT
5. OPERATING TEMPERATURE RANGE: -40 °C TO 100 °C
6. MAX. CABLE SIZE: 120 sqmm
7. MACHED CABLE MUST MEET ISO6722
8. CABLE TERMINAL WIDTH SHOULD NOT EXCEED 20mm.

NO.	COMPONENT NO.	COMPONENT NAME	QTY/M	U/M
9	873-830	SEALED ZCASE COVER	1	EA
8	901-737	SEALED ZCASE COVER SEAL	1	EA
7	(B) 30912311	M8 SERRATED FLANGE NUT	6	EA
6	882-939	SEALED ZCASE BUSBAR	1	EA
5	942-002	AUTO VENT 10MM OD	2	EA
4	868-410	SEALED ZCASE HOUSING	1	EA
3	883-086	YELLOW LATCH WITH GRIP	4	EA
2	883-088	LATCH BIG GRIP	2	EA
1	890009470	TETHER	1	EA

DIMENSIONS ARE SHOWN IN MILLIMETERS. DIMENSIONS AND TOLERANCES ARE DEFINED ACCORDING TO ANSI/ASME Y14.5-1994.

●	FIT/ FUNCTION CRITICAL CHARACTERISTICS
<S>	SAFETY/ COMPLIANCE CRITICAL CHARACTERISTICS SYMBOL
CPK	DENOTES CPK DIMENSIONS MINIMUM CPK VALUE
⟨ST⟩	DENOTES A CHARACTERISTIC THAT PROVIDES AN INDICATION OF PROCESS PERFORMANCE.PROCEDURE FOR MEASUREMENTAND TRACKINGTO BE DEFINED IN LITTELFUSE INSPECTION INSTRUCTIONS
CP	DENOTES CP DIMENSIONS, -MINIMUM CP VALUE MUST BE WITHIN THE DIMENSIONAL LIMITATIONS SHOWN ON DRAWING AND INITIALLY LOCATED TO ALLOW FOR MAXIMUM TOOL LIFE

	NAME	DATE
DRAWN	VLI	2022.8.4
CHECKED	EJIN	2022.8.4
	-	-
	-	-

FORM NO: CVP-PE40-0005 REV B

THIRD ANGLE PROJECTION

DO NOT SCALE DRAWING

Littelfuse
Expertise Applied | Answers Delivered

TITLE
6 WAY SEALED ZCASE PDM

SIZE	DWG. NO.	REV.
C	FHZS200	B

SCALE 1:2 | SHEET 1 OF 1